1675 MacArthur Blvd., Costa Mesa, CA, 92626 USA
Main Number (714) 754-6175 or toll free (USA only) (800) 854-4079
Customer Service(714) 957-7150 or toll free (USA only) (800) 772-2834

ALK-MD3 Array Link Kit for Three MD-series Loudspeaker Enclosures

This kit is to be used only for arraying of three vertically oriented QSC MD series loudspeaker enclosures, active or passive. Do not use this kit or any component of this kit for any other purpose. Do not orient the enclosures horizontally under any circumstance.

Contents:

•Array link, AL-MDR3	2 each
•Array link, AL-MDF	4 each
•Bolt, hex, cap, 5/16”-18TPI x 1.5", grade 5	14 each
•Washer, flat, 7/16" x 1" , .07” - .09” thick	20 each (3 are spares)
•Washer, lock, internal tooth, 3/8"	20 each (3 are spares)
•Eyebolt, 3/8”-16TPI x 1.5”	3 each

Rules for Suspension

- Do not orient the enclosures horizontally under any circumstance.
- Correct use of all suspension hardware and components is imperative in sound system rigging and deployment.
- Always calculate suspended loads before lifting to ensure suspension components and hardware are used within their respective load limits.
- Research local codes and regulations to fully understand the requirements for suspended loads in the venue in which the equipment is to be suspended.
- Be absolutely certain of the integrity of any structural member intended to support suspended loads. Hidden structural members can have hidden structural weakness.
- Consult a professional mechanical or structural engineer licensed in the jurisdiction of the sound system installation to review, verify, and approve all attachments to the building or structure.
- Never assume anything- owner or third-party supplied suspension attachment points may not be adequate for the loads to be suspended.
- Employ the services of a professional rigger for hoisting, positioning, and attaching the equipment to the supporting structure.
- Always inspect all components (enclosures, suspension brackets, pins, frames, bolts, nuts, slings, shackles, etc.) for cracks, wear, deformation, corrosion, missing, loose, or damaged parts that could reduce the strength of the assembly before lifting. Discard any worn, defective, or suspect parts and replace them with new appropriately load-rated parts.

Shock Loading

When a load is either moved or stopped, its static weight is magnified. Sudden movements can magnify the static weight several times. This magnification of static weight is termed "shock loading". Shock loading poses a danger to equipment and workers. The effects of shock loading can be instantaneous, or they may remain undetected unless the equipment is visually damaged. Avoiding shock loading requires careful planning and knowledge of equipment, rigging, and lifting practices.

- Shock loading of equipment and structures is usually confined to lifting and installation, but natural forces (winds, earthquakes) can impose shock loads several times the static load. This is why structures and suspension equipment must be capable of supporting several times the weight of the equipment suspended.

Working Load Limits

Component	Weight	7:1 Design Factor	10:1 Design Factor	12:1 Design Factor
MD-F, MD-L, MD-FP, and MD-LP loudspeakers, top and side panel suspension points	90 lb (40.8 kg)	457 lb (207.3 kg)	320 lb (145.2 kg)	267 lb (121.1 kg)
MD-F, MD-L, MD-FP, and MD-LP loudspeakers, rear panel suspension points	n/a	314 lb (142.4 kg)	220 lb (99.8 kg)	183 lb (83.0 kg)
Eyebolt	n/a	857 lb (388.7 kg)	600 lb (272.2 kg)	500 lb (226.8 kg)

Installation Instructions

1. Orient the enclosures with their bottoms pointing upward and the required splay angle.

2. Remove the factory-installed screws from the enclosures where the bolts are to be installed for the ALK-MD3 kit.

3. Set the rear (AL-MD3) and front (AL-MDF) links on the enclosures and position the assembly until the mounting holes line up at the required splay angle.

4. Assemble a lock washer, then a flat washer, onto each bolt. Put the bolt assembly through the selected mounting hole in the array link and thread the bolt into the enclosure's threaded insert. Tighten fully.

5. Carefully turn the array over, ensuring not to stress the links previously installed. Repeat steps 2 - 4 for the top surface of the enclosures.

6. Install two eyebolt assemblies; one on each of the outermost enclosure's top surface, outermost front threaded insert. Ensure each eyebolt has a lock washer, then a flat washer installed before threading into the enclosure. Tighten eyebolts fully.

7. Install one eyebolt assembly on the rear panel of the center enclosure for pull back and stabilization. Tighten the eyebolt fully.

NOTE! Do not orient the enclosures horizontally! This array link kit is intended for enclosures to be vertically oriented only!

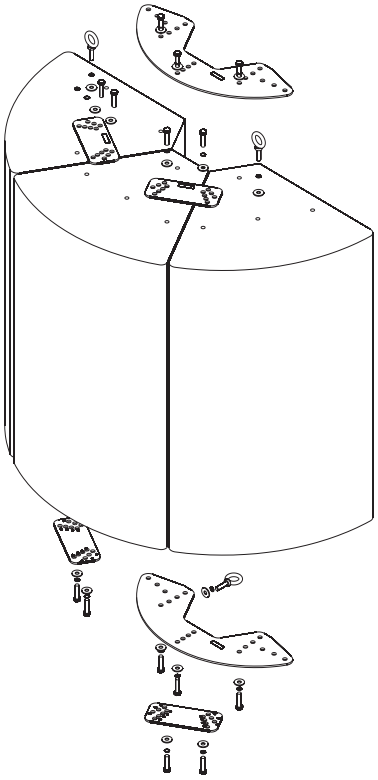

Figure 1- Vertically oriented array and hardware assembly order.

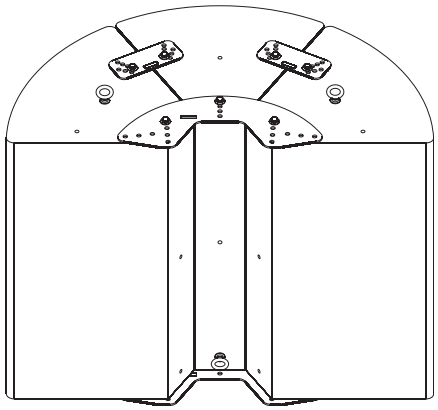

Figure 2- Rear view of array. Note eyebolt installation locations.

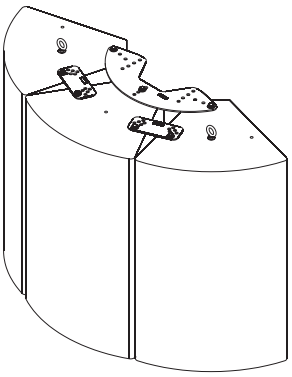

Figure 3- Minimum splay angle example.

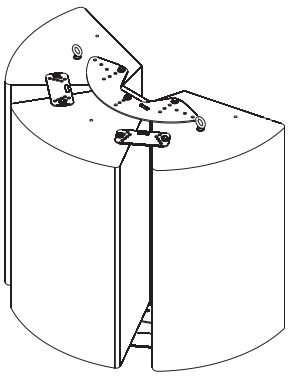

Figure 4- Maximum splay angle example.